Work Order ID 70604

Monday, June 13, 2011 11:47:47 AM

Item ID: D412-704-041
Revision ID:
Item Name: Pedal Assembly (205/212/214/412)
Start Date: 6/10/2011 **Start Qty:** 2.00
Required Date: 6/22/2011 **Req'd Qty:** 2.00
Reference:

Accept

Setup Start
Stop

Cust Item ID:
Customer:

Run Start
Stop

Approvals: **Process Plan:** H **Date:** 11-06-13 **Tooling:** _____ **Date:** _____
QC: _____ **Date:** _____ **SPC (Y/N):** _____ **Date:** _____

Sequence ID/ Work Center ID	Operation Description	Set Up/ Run Hours	Tool ID	Tool #	Plan Code	Accept Qty	Reject Qty	Reject Number	Insp. Stamp
Draw Nbr	**Revision Nbr**								
D412-704-041	Rev A								
100	Small Fab	0.00							
Small Fab	**Memo**	0.00							
Small Fab	Assemble pedal as per Dwg D412-704-041 Tighten & Torque Bolts as per Dwg D412-704-041								
110	QC5- Inspect part completeness to step on W/O	0.00							
QC	**Memo**	0.00							
Quality Control									
120	Pick Kit	0.00							
Packaging	**Memo**	0.00							
Packaging									

11/07/13 3

43

JB 11/07/13

Dart Aerospace Ltd

W/O:		WORK ORDER CHANGES					
DATE	STEP	PROCEDURE CHANGE	By	Date	Qty	Approval Chief Eng / Prod Mgr	Approval QC Inspector

Part No: _____ PAR #: _____ Fault Category: _____ NCR: Yes No DQA: _____ Date: _____

Resolution: _____ Disposition: _____ QA: N/C Closed: _____ Date: _____

NCR:		WORK ORDER NON-CONFORMANCE (NCR)						
DATE	STEP	Description of NC Section A	Corrective Action Section B			Verification Section C	Approval Chief Eng	Approval QC Inspector
			Initial Chief Eng	Action Description Chief Eng	Sign & Date			

NOTE: Date & initial all entries

H:\fFORMS\Quality Assurance\approved QA\NCRWO RevE

Work Order ID 70604

Monday, June 13, 2011 11:47:47 AM

Item ID: D412-704-041 **Accept** **Setup Start** **Stop**

Revision ID:

Item Name: Pedal Assembly (205/212/214/412)

Start Date: 6/10/2011 **Start Qty:** 2.00 **Cust Item ID:**

Required Date: 6/22/2011 **Req'd Qty:** 2.00 **Customer:**

Reference:

Run Start **Stop**

Approvals: **Process Plan:** _____ **Date:** _____ **Tooling:** _____ **Date:** _____

QC: _____ **Date:** _____ **SPC (Y/N):** _____ **Date:** _____

Sequence ID/ Work Center ID	Operation Description	Set Up/ Run Hours	Tool ID	Tool #	Plan Code	Accept Qty	Reject Qty	Reject Number	Insp. Stamp
130 QC Quality Control	QC4- 100% Inspect kits for completeness	0.00				3			
	Memo	0.00							
140 Packaging Packaging	Identify as per dwg & Stock Location: 197	0.00							
	Memo	0.00							
150 QC Quality Control	QC21- Final Inspection - Work Order Release	0.00							
	Memo	0.00							

11/7/18

MF 11-07-15

Dart Aerospace Ltd

W/O:		WORK ORDER CHANGES					
DATE	STEP	PROCEDURE CHANGE	By	Date	Qty	Approval Chief Eng / Prod Mgr	Approval QC Inspector

Part No: _____ **PAR #:** _____ **Fault Category:** _____ **NCR:** Yes No **DQA:** _____ **Date:** _____

Resolution: _____ **Disposition:** _____ **QA: N/C Closed:** _____ **Date:** _____

NCR:		WORK ORDER NON-CONFORMANCE (NCR)						
DATE	STEP	Description of NC Section A	Corrective Action Section B			Verification Section C	Approval Chief Eng	Approval QC Inspector
			Initial Chief Eng	Action Description Chief Eng	Sign & Date			

NOTE: Date & initial all entries

H:\fFORMS\Quality Assurance\approved QA\NCRWO RevE

Picklist Print

Monday, June 13, 2011 11:47:53 AM

Work Order ID: 70604

Parent Item: D412-704-041

Parent Item Name: Pedal Assembly (205/212/214/412)

Start Date: 6/10/2011 **Required Date:** 6/22/2011

Start Qty: 2.00 **Required Qty:** 2.00

Comments:
IPP Rev:B□05.01.28□Removed hardware on Step 2; Added Figures 1-3□KJ/RF
IPP Rev:C□06.03.08 Re-format EC
IPP Rev:D 07-03-20 Added Dwg D412-704-041 07-03-20 JLM
IPP Rev:E 07.05.02 Reformat EC
IPP Rev:F 08-10-08 as per revB DD veriifed by:EC

Component Item ID/ Item Name	Replacement Item ID	Mfg/ Purch	Bin Item	Primary Location	Last Location	Route Seq ID	Unit of Measure	Qty on Hand	Qty per Kit	Total Qty	Qty Issued	Date Issued	Status
AN3-10A Bolt		Purchased	No			100	Each	179.0000	1	2	2	11/07/13	
				Location			**Loc Qty**		**Loc Code**				
				ST351			179						
					117313		45			3			
					117795		134						
AN315-4R Nut		Purchased	No			100	Each	51.0000	1	2	2	11/07/13	
				Location			**Loc Qty**		**Loc Code**				
				ST324			51						
					17566		51			3			
AN4-10A Bolt		Purchased	No			100	Each	186.0000	1	2	2	11/07/13	
				Location			**Loc Qty**		**Loc Code**				
				ST356			186						
					116419		11						
					117313		50			3			
					117619		125						

Dart Aerospace Ltd

W/O:		WORK ORDER CHANGES					
DATE	STEP	PROCEDURE CHANGE	By	Date	Qty	Approval Chief Eng / Prod Mgr	Approval QC Inspector

Part No: _____ **PAR #:** _____ **Fault Category:** _____ **NCR:** Yes No **DQA:** _____ **Date:** _____

Resolution: _____ **Disposition:** _____ **QA: N/C Closed:** _____ **Date:** _____

NCR:		WORK ORDER NON-CONFORMANCE (NCR)						
DATE	STEP	Description of NC Section A	Corrective Action Section B			Verification Section C	Approval Chief Eng	Approval QC Inspector
			Initial Chief Eng	Action Description Chief Eng	Sign & Date			

NOTE: Date & initial all entries

H:\fFORMS\Quality Assurance\approved QA\NCRWO RevE

Picklist Print

Monday, June 13, 2011 11:47:53 AM

Work Order ID: 70604

Parent Item: D412-704-041

Parent Item Name: Pedal Assembly (205/212/214/412)

Start Date: 6/10/2011 **Required Date:** 6/22/2011

Start Qty: 2.00 **Required Qty:** 2.00

AN4-12A		Purchased	No	100	Each	168.0000	2	4
Bolt								

Location	Loc Qty	Loc Code
ST357	168	
115422	68	
117508	100	

6

AN4-13A		Purchased	No	100	Each	306.0000	1	2
Bolt								

Location	Loc Qty	Loc Code
ST357	306	
117962	306	

3

AN960JD10	NAS1149D0363J	Purchased	No	100	Each	0.0000	5	10
Washer								

M117291 (72) M117601 (50)

AN960JD416	NAS1149D0463J	Purchased	No	100	Each	0.0000	11	22
Washer								

M117591

AN960JD416L	NAS1149D0416J	Purchased	No	100	Each	33.0000	3	6
Washer								

Location	Loc Qty	Loc Code
FP-B	33	
110153	33	

M116513

D3204-041		Manufactured	No	100	Each	0.0000	1	2
Release Pedal Assembly								

B 70297 (32)

Dart Aerospace Ltd

W/O:		WORK ORDER CHANGES					
DATE	STEP	PROCEDURE CHANGE	By	Date	Qty	Approval Chief Eng / Prod Mgr	Approval QC Inspector

Part No: _____ **PAR #:** _____ **Fault Category:** _____ **NCR:** Yes No **DQA:** _____ **Date:** _____

Resolution: _____ **Disposition:** _____ **QA: N/C Closed:** _____ **Date:** _____

NCR:		WORK ORDER NON-CONFORMANCE (NCR)						
DATE	STEP	Description of NC Section A	Corrective Action Section B			Verification Section C	Approval Chief Eng	Approval QC Inspector
			Initial Chief Eng	Action Description Chief Eng	Sign & Date			

NOTE: Date & initial all entries

Picklist Print

Monday, June 13, 2011 11:47:54 AM

Work Order ID: 70604

Parent Item: D412-704-041

Parent Item Name: Pedal Assembly (205/212/214/412)

Start Date: 6/10/2011 **Required Date:** 6/22/2011

Start Qty: 2.00 **Required Qty:** 2.00

D3205-1	Manufactured	No	100	Each	0.0000	1	2	
Pedal Bracket								B70127 (3x) 11/07/13
D3205-3	Manufactured	No	100	Each	19.0000	1	2	
Back Plate								11/07/13

Location	Loc Qty	Loc Code
GA	19	
69626	19	

3

D3206-1	Manufactured	No	100	Each	10.0000	1	2	
Pedal Arm								11/07/13

Location	Loc Qty	Loc Code
GA	10	
55732	1	
70302	9	

3

D3209-041	Manufactured	No	100	Each	1.0000	1	2	
Bracket Assembly								11/07/13

Location	Loc Qty	Loc Code
GA	1	
65154	1	

B70301 (3x)

Dart Aerospace Ltd

W/O:		WORK ORDER CHANGES					
DATE	STEP	PROCEDURE CHANGE	By	Date	Qty	Approval Chief Eng / Prod Mgr	Approval QC Inspector

Part No: _____ **PAR #:** _____ **Fault Category:** _____ **NCR:** Yes No **DQA:** _____ **Date:** _____

Resolution: _____ **Disposition:** _____ **QA: N/C Closed:** _____ **Date:** _____

NCR:		WORK ORDER NON-CONFORMANCE (NCR)						
DATE	STEP	Description of NC Section A	Corrective Action Section B			Verification Section C	Approval Chief Eng	Approval QC Inspector
			Initial Chief Eng	Action Description Chief Eng	Sign & Date			

NOTE: Date & initial all entries

Picklist Print

Monday, June 13, 2011 11:47:54 AM

Work Order ID: 70604

Parent Item: D412-704-041

Parent Item Name: Pedal Assembly (205/212/214/412)

Start Date: 6/10/2011 **Required Date:** 6/22/2011

Start Qty: 2.00 **Required Qty:** 2.00

MS21042L3	Purchased	No	100	Each	2,280.000	1	2	11/07/13
Nut								

Location	Loc Qty	Loc Code	
ST300	2280		
116391	9		
116549	571		
117441	800		
117601	400		
117885	500		3

MS21042L4	Purchased	No	100	Each	5,203.000	5	10	11/07/13
Nut								

Location	Loc Qty	Loc Code	
ST300	5203		
117441	2903		
117601	800		15
117885	1500		

MS24694-S102	Purchased	No	100	Each	46.0000	1	2	11/07/13
Screw								

Location	Loc Qty	Loc Code	
ST288	46		
114382	46		3

MS9519-10	Purchased	No	100	Each	34.0000	1	2	11/07/13
Bolt								

Location	Loc Qty	Loc Code	
ST296	34		
100290	34		3

Dart Aerospace Ltd

W/O:		WORK ORDER CHANGES					
DATE	STEP	PROCEDURE CHANGE	By	Date	Qty	Approval Chief Eng / Prod Mgr	Approval QC Inspector

Part No: _____ **PAR #:** _____ **Fault Category:** _____ **NCR:** Yes No **DQA:** _____ **Date:** _____

Resolution: _____ **Disposition:** _____ **QA: N/C Closed:** _____ **Date:** _____

NCR:		WORK ORDER NON-CONFORMANCE (NCR)						
DATE	STEP	Description of NC Section A	Corrective Action Section B			Verification Section C	Approval Chief Eng	Approval QC Inspector
			Initial Chief Eng	Action Description Chief Eng	Sign & Date			

NOTE: Date & initial all entries

Picklist Print

Monday, June 13, 2011 11:47:55 AM

Work Order ID: 70604

Parent Item: D412-704-041

Parent Item Name: Pedal Assembly (205/212/214/412)

Start Date: 6/10/2011 **Required Date:** 6/22/2011

Start Qty: ~~2.00~~ **Required Qty:** 2.00

AN3-6A		Purchased	No	120	Each	360.0000	2	6 ✓ JB
Bolt								

Location		Loc Qty	Loc Code	
ST351		360		
	116704	60		116704
	117441	300		

AN960JD10L	NAS1149D0332J	Purchased	No	120	Each	0.0000	4	82 ✓ 117291 JB
Washer								
MS21042L3		Purchased	No	120	Each	2,280.000	2	6 ✓ JB 11/07/13
Nut								

Location		Loc Qty	Loc Code	
ST300		2280		
	116391	9		
	116549	571		116549
	117441	800		
	117601	400		
	117885	500		

Dart Aerospace Ltd

W/O:		WORK ORDER CHANGES					
DATE	STEP	PROCEDURE CHANGE	By	Date	Qty	Approval Chief Eng / Prod Mgr	Approval QC Inspector

Part No: _____ **PAR #:** _____ **Fault Category:** _____ **NCR:** Yes No **DQA:** _____ **Date:** _____

Resolution: _____ **Disposition:** _____ **QA: N/C Closed:** _____ **Date:** _____

NCR:		WORK ORDER NON-CONFORMANCE (NCR)						
DATE	STEP	Description of NC Section A	Corrective Action Section B			Verification Section C	Approval Chief Eng	Approval QC Inspector
			Initial Chief Eng	Action Description Chief Eng	Sign & Date			

NOTE: Date & initial all entries

H:\fFORMS\Quality Assurance\approved QA\NCRWO RevE

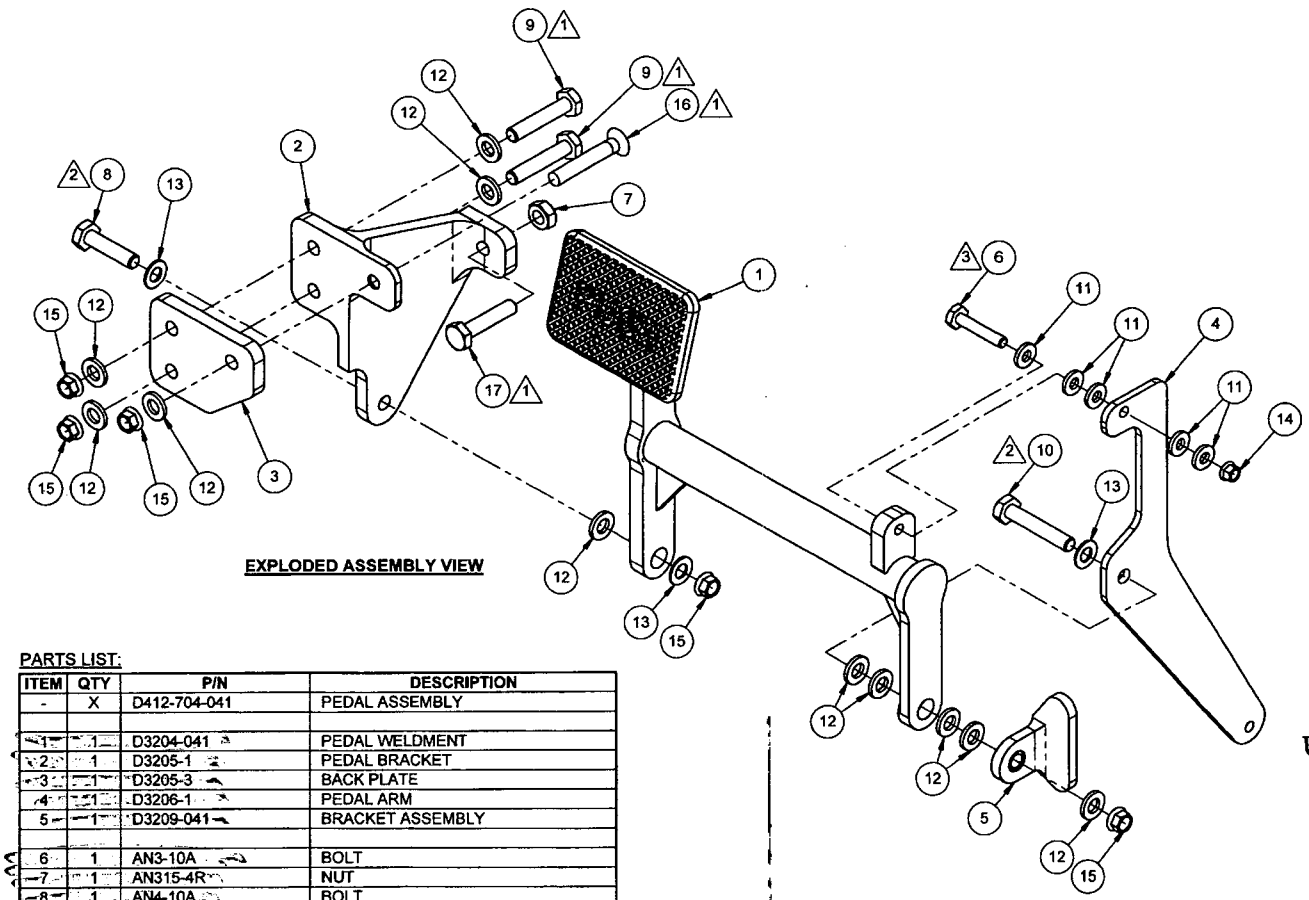

EXPLODED ASSEMBLY VIEW

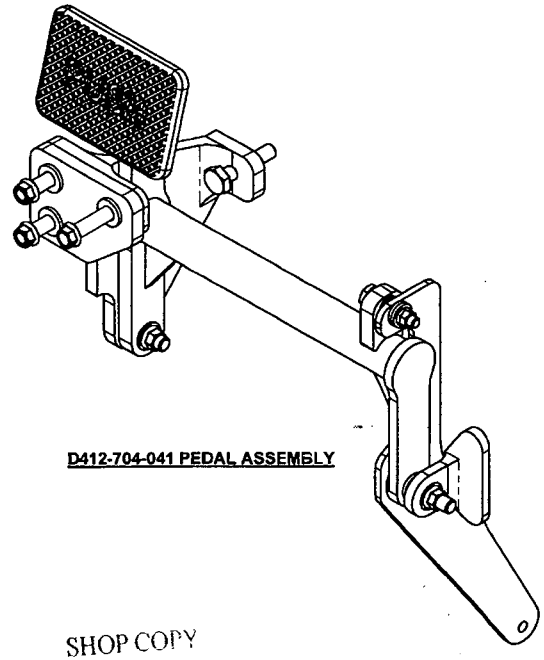

D412-704-041 PEDAL ASSEMBLY

PARTS LIST:

ITEM	QTY	P/N	DESCRIPTION
-	X	D412-704-041	PEDAL ASSEMBLY
1	1	D3204-041	PEDAL WELDMENT
2	1	D3205-1	PEDAL BRACKET
3	1	D3205-3	BACK PLATE
4	1	D3206-1	PEDAL ARM
5	1	D3209-041	BRACKET ASSEMBLY
6	1	AN3-10A	BOLT
7	1	AN315-4R	NUT
8	1	AN4-10A	BOLT
9	2	AN4-12A	BOLT
10	1	AN4-13A	BOLT
11	5	AN960JD10	WASHER
12	11	AN960JD416	WASHER
13	3	AN960JD416L	WASHER
14	1	MS21042L3	NUT (OR MS21042-3)
15	5	MS21042L4	NUT (OR MS21042-4)
16	1	MS24694-S102	SCREW
17	1	MS9519-10	BOLT
N/A*	2	AN3-6A	BOLT
N/A*	4	AN960JD10L	WASHER
N/A*	2	MS21042L3	NUT (OR MS21042-3)

* SHIPPED LOOSE WITH -041 KIT (NOT PRE-ASSEMBLED AT DART)

NOTES:

1. INSTALL IDENTIFIED FASTENERS LOOSE (HAND TIGHTEN ONLY).
2. TIGHTEN IDENTIFIED FASTENERS UNTIL SNUG. ENSURE THAT PARTS CAN STILL ROTATE.
3. TORQUE IDENTIFIED FASTENERS TO 15-25 in-lbs (1.7-2.8 N-m).

SHOP COPY
RETURN TO
ENGINEERING
UNCONTROLLED COPY
SUBJECT TO AMENDMENT
WITHOUT NOTICE
WORK ORDER
NO. 76604
pl 11-06-13

RELEASED
07.01.30

REV	DATE	DESCRIPTION
A	07.01.23	NEW ISSUE

DESIGN: CB	DRAWN BY: CB	DART AEROSPACE LTD, HAWKESBURY, ONTARIO, CANADA
CHECKED: LE	APPROVED:	DRAWING NO. D412-704-041 — REV. A — SHEET 1 OF 1
DATE: 07.01.23		TITLE: PEDAL ASSEMBLY — SCALE 1:2

COPYRIGHT © 2007 BY DART AEROSPACE LTD
THIS DOCUMENT IS PRIVATE AND CONFIDENTIAL AND IS SUPPLIED ON THE EXPRESS CONDITION THAT IT IS NOT TO BE USED FOR ANY PURPOSE OR COPIED OR COMMUNICATED TO ANY OTHER PERSON WITHOUT WRITTEN PERMISSION FROM DART AEROSPACE LTD.

Dart Aerospace Ltd

W/O:		WORK ORDER CHANGES					
DATE	STEP	PROCEDURE CHANGE	By	Date	Qty	Approval Chief Eng / Prod Mgr	Approval QC Inspector

Part No: _____ **PAR #:** _____ **Fault Category:** _____ **NCR:** Yes No **DQA:** _____ **Date:** _____

Resolution: _____ **Disposition:** _____ **QA: N/C Closed:** _____ **Date:** _____

NCR:		WORK ORDER NON-CONFORMANCE (NCR)						
DATE	STEP	Description of NC Section A	Corrective Action Section B			Verification Section C	Approval Chief Eng	Approval QC Inspector
			Initial Chief Eng	Action Description Chief Eng	Sign & Date			

NOTE: Date & initial all entries

H:\FORMS\Quality Assurance\approved QA\NCRWO RevE